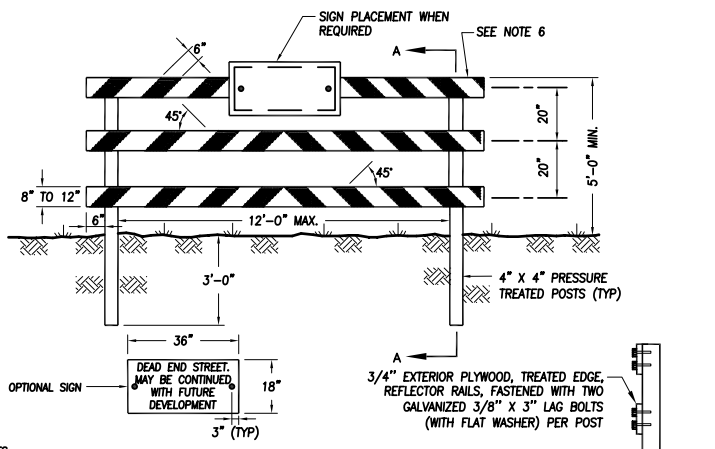

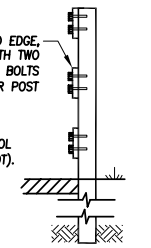

SECTION A–A

NOTES:

1. BARRICADES SHALL BE INSTALLED IN CONFORMANCE WITH THE MANUAL OF UNIFORM TRAFFIC CONTROL DEVICES (MUTCD) AS MODIFIED BY THE WASHINGTON STATE DEPARTMENT OF TRANSPORTATION (WSDOT).
2. MARKINGS FOR BARRICADE RAILS SHALL BE ALTERNATE WHITE AND RED STRIPES (SLOPING DOWNWARD AT AN ANGLE OF 45 DEGREES).
3. THE ENTIRE AREA OF WHITE AND RED STRIPES SHALL BE REFLECTIONIZED SO AS TO BE VISIBLE UNDER NORMAL ATMOSPHERIC CONDITIONS FROM A MINIMUM DISTANCE OF 1,000 FEET WHEN ILLUMINATED BY THE LOW BEAMS OF STANDARD AUTOMOBILE HEADLIGHTS. THE PREDOMINANT COLOR FOR OTHER BARRICADE COMPONENTS SHALL BE WHITE.
4. BARRICADE SECTION SHALL EXTEND ACROSS THE ENTIRE STREET AREA. WHERE BARRICADE EXTENDS ENTIRELY ACROSS A ROADWAY, THE STRIPES SHALL SLOPE DOWNWARD IN THE DIRECTION TOWARD WHICH TRAFFIC MUST TURN IN DETOURING. WHERE BOTH RIGHT AND LEFT TURNS ARE ALLOWED, THE CHEVRON STRIPING SHALL SLOPE DOWNWARD IN BOTH DIRECTIONS FROM THE CENTER OF THE BARRICADE. RAILS SHALL BE PLACED BOTH FRONT AND BACK OF BARRICADE IF REQUIRED FOR TWO–WAY TRAFFIC. RAILS SHALL BE THE SAME SIZE. FOR WIDER APPLICATIONS, MULTIPLE SECTIONS, SPACED NO FURTHER THAN 4" SHALL BE USED.
5. RAILS SHALL BE PLACED BOTH ON THE FRONT AND BACK OF THE BARRICADE IF REQUIRED FOR TWO–WAY TRAFFIC. RAILS SHALL BE THE SAME SIZE.
6. LUMBER SHALL BE STANDARD GRADE OR BETTER.
7. IF SIGN IS REQUIRED, FIELD DRILL TWO HOLES TO ACCOMMODATE GALVANIZED 3/8" MACHINE BOLT, WASHER AND NUT. THE SIGN SHALL BE INSTALLED SO THAT THE CENTER RAIL IS NOT COVERED.
8. FOR TEMPORARY BARRIER SEE WSDOT STANDARD PLAN H–2.

STREET BARRICADE, TYPE III
NTS

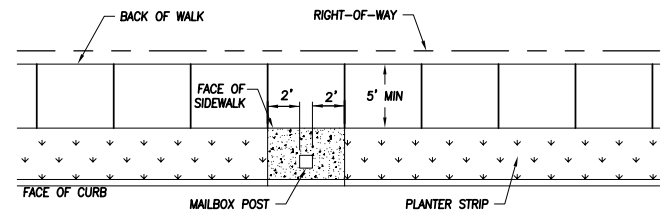

MAILBOX IN PLANTER STRIP

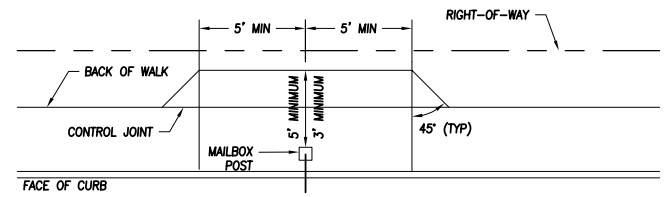

MAILBOX IN SIDEWALK

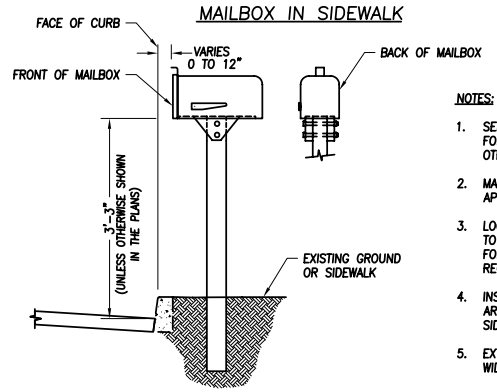

NOTES:

1. SEE WSDOT STANDARD DETAIL H–12 FOR MAILBOX, POST, BRACKET AND OTHER INSTALLATION DETAILS.
2. MAILBOXES MUST BE POSTMASTER APPROVED.
3. LOCATION OF MAILBOXES ARE SUBJECT TO APPROVAL BY THE CITY ENGINEER FOR ACCESS AND SIGHT DISTANCE REQUIREMENTS.
4. INSTALL EXPANSION JOINT MATERIAL AROUND MAILBOX POST WHEN SET IN SIDEWALK.
5. EXTEND SIDEWALK JOINTS THROUGH WIDENED SIDEWALK SECTION.

TYPICAL MAILBOX PLACEMENT
NTS

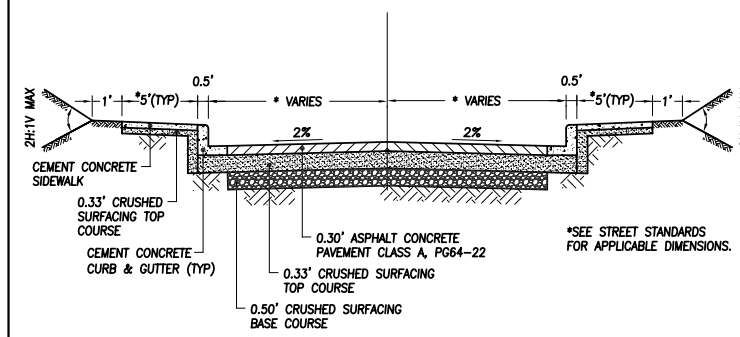

TYPICAL ROADWAY CROSS SECTIONS
NTS

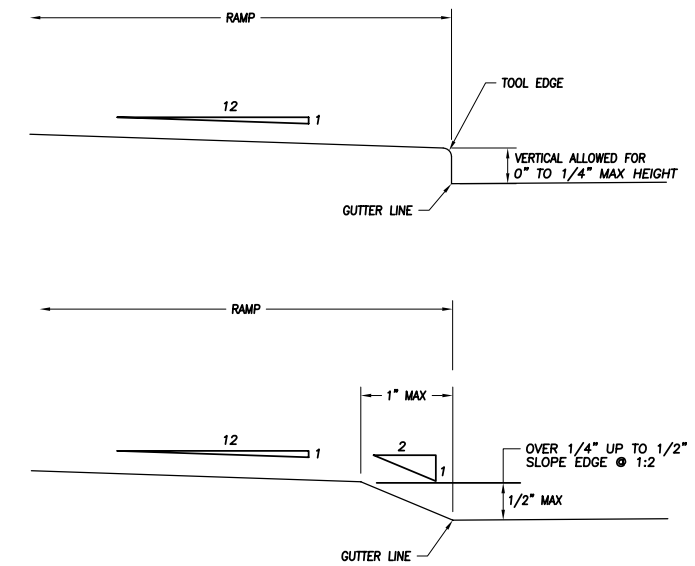

NOTE:

CHANGES UP TO 1/4" MAY BE VERTICAL AND WITHOUT EDGE TREATMENT. CHANGES IN LEVEL GREATER THAN 1/4" UP TO 1/2" SHALL HAVE THE WHOLE VERTICAL CHANGE BEVELED WITH A SLOPE NO GREATER THAN 2:1.

RAMP LIP DETAIL
NTS

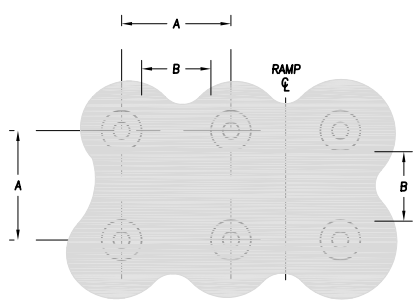

PLAN

	MIN	MAX
A	1–5/8"	2–3/8"
B	5/8"	1–1/2"
C	7/16"	3/4"
D	7/8"	1 7/16"

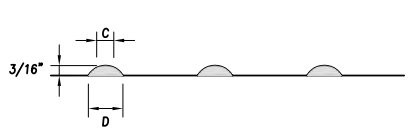

ELEVATION

NOTE:

DETECTABLE WARNING PATTERNS MAY BE CREATED BY ANY METHOD THAT WILL ACHIEVE THE TRUNCATED DOME DIMENSIONS AND SPACING SHOWN. THE DETECTABLE WARNING PATETERN AREA SHALL BE YELLOW, IN COMPLIANCE WITH WSDOT STANDARD SPECIFICATION 8–14.3(3).

DETECTABLE WARNING PATTERN DETAIL
NTS

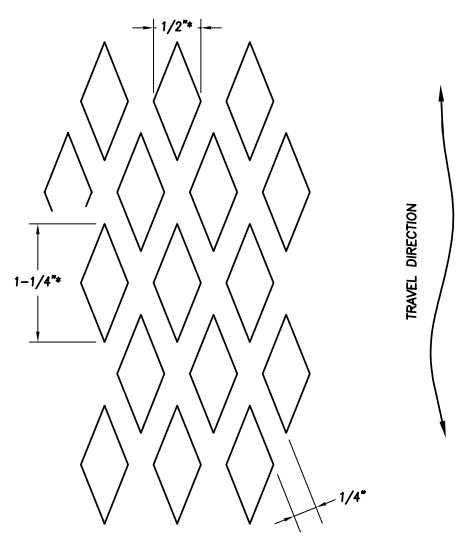

* NOMINAL DIMENSIONS

NOTE:

RAMP TEXTURE IS TO BE DONE WITH AN EXPANDED METAL GRATE PLACED AND REMOVED FROM WET CONCRETE TO LEAVE A DIAMOND PATTERN AS SHOWN. THE LONG AXIS OF THE DIAMOND PATTERN SHALL BE IN THE DIRECTION OF TRAVEL. GROOVES SHALL BE 1/8" DEEP AND 1/4" WIDE. ALTERNATIVE TEXTURE PATTERNS SHALL BE APPROVED BY THE CITY OF WASHOUGAL BEFORE USE.

RAMP TEXTURE DETAIL
NTS

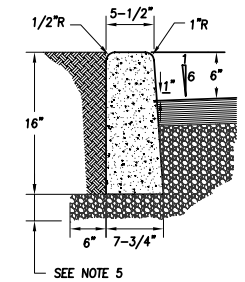

CEMENT CONCRETE BARRIER CURB

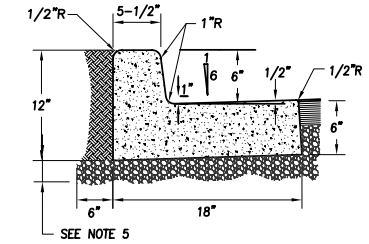

CEMENT CONCRETE BARRIER CURB AND GUTTER

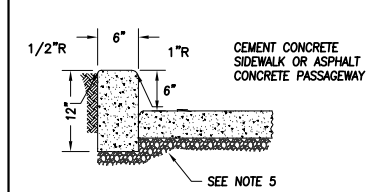

CEMENT CONCRETE PEDESTRIAN CURB

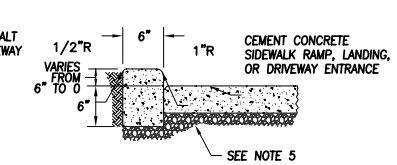

CEMENT CONCRETE PEDESTRIAN CURB
AT SIDEWALK RAMPS & LANDINGS, AND DRIVEWAY ENTRANCES

NOTES:

1. CONCRETE SHALL BE 3000 PSI MIN COMMERCIAL CONCRETE.
2. CONTROL JOINT SPACING NOT TO EXCEED 15 FEET. THE DEPTH OF THE JOINT SHALL BE AT LEAST 1–1/2 INCHES. CONTROL JOINTS IN CURB SHALL MATCH PATTERNS IN ADJACENT SIDEWALK.
3. CRUSHED SURFACING SHALL BE TO SUBGRADE OF STREET SECTION OR 3 INCHES, WHICHEVER IS GREATER, AND SHALL EXTEND 6" BEHIND THE CURB.
4. CURB TO BE BRUSH FINISHED. ALL EXISTING EDGES SHALL BE SAWCUT.
5. 3" DEPTH CRUSHED SURFACING TOP COURSE COMPACTED TO 95% OF MAX DRY DENSITY.

CONCRETE CURBS
NTS

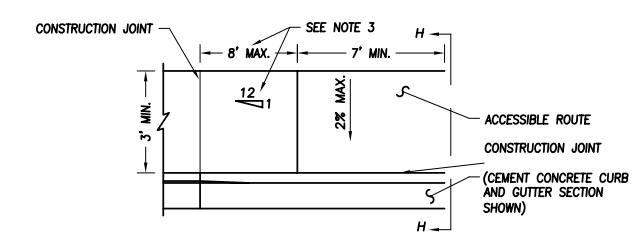

APPROACH TYPE 1 – HALF PLAN

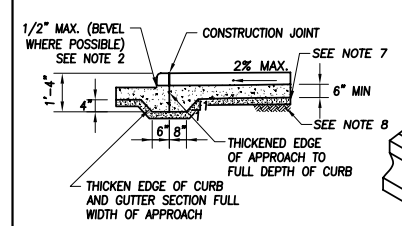

SECTION H–H

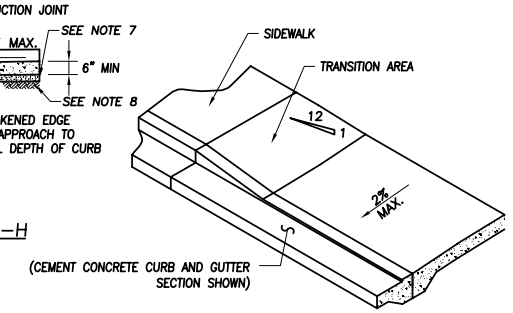

APPROACH TYPE 1 – HALF ISOMETRIC

NOTES:

1. A MINIMUM 3' WIDE ACCESSIBLE ROUTE SHALL BE MAINTAINED IN ALL PEDESTRIAN ACCESSIBLE AREAS.
2. CHANGES IN LEVEL UP TO 1/4" MAY BE VERTICAL AND WITHOUT EDGE TREATMENT. CHANGES IN LEVEL BETWEEN 1/4" AND 1/2" SHALL BE BEVELED WITH A SLOPE NO GREATER THAN 2:1.
3. TRANSITION AREA TO BE SLOPED AT 1v TO 12h, UNLESS STREET GRADE WOULD CREATE A TRANSITION LENGTH GREATER THAN 8', THEN THE MAXIMUM LENGTH OF 8' GOVERNS SLOPE.
4. CEMENT CONCRETE APPROACHES SHALL BE CONSTRUCTED OF AIR–ENTRAINED CONCRETE CLASS 3000 AND MAY BE POURED INTEGRAL WITH CURB.
5. EXISTING CURB, GUTTER AND SIDEWALK TO BE SAWCUT AND REMOVED FOR INSTALLATION OF APPROACH.
6. COMMERCIAL DRIVEWAY REQUIRES REINFORCING STEEL (6"x6"x10 GA MESH) WITH A MIN OF 3" OF COVER AND 8" MIN THICKNESS OF CONCRETE.
7. 3" DEPTH CRUSHED SURFACING TOP COURSE COMPACTED TO 95% OF MAX DRY DENSITY.
8. SUBGRADE PREPARED PER WSDOT STANDARD SPECIFICATION 2–06.3(1).

CEMENT CONCRETE APPROACH DETAIL – TYPE 1
NTS

By	APPR.	DATE	No.	REVISIONS
MBC		8/03		APPROVED (CD VERSION 1.1)
MBC		10/03		APPROVED (CD VERSION 1.2)

		SCALE	
DESIGNED	EB/LF	HOR.	NTS
DRAWN	BS	VERT.	NTS
CHECKED	JG	FIELD BOOK	N/A
APPROVED	MBC		

JOB NUMBER	CITY OF WASHOUGAL	DRAWING NUMBER
DATE	STANDARD TRANSPORTATION DETAILS – SHEET 3	SHEET of